1. General Description

A: SPECIFICATION

Model			2.5 L Turbo	2.5 L Non-turbo
Transmission type			5MT	
Clutch cover	Type		Push type	
	Diaphragm set load N (kgf, lbf)		7,850 (800, 1,764)	5,688 (580, 1,279)
Clutch disc	Facing material		Woven (Non-asbestos)	
	O.D. × I.D. × thickness mm (in)	Pressure plate side	230 × 155 × 3.5 (9.06 × 6.10 × 0.138)	225 × 150 × 3.5 (8.86 × 5.9 × 0.138)
		Flywheel side	230 × 155 × 3.2 (9.06 × 6.10 × 0.126)	
	Spline outer diameter mm (in)		25.2 (0.992), (Number of teeth: 24)	
	Depth of rivet head mm (in)	Clutch cover side	1.65 — 2.25 (0.065 — 0.089)	
		Flywheel side	1.35 — 1.95 (0.053 — 0.077)	
		Limit of sinking	0.3 (0.012)	
	Deflection limit mm (in)		0.7 (0.028) at R = 110 (4.33)	
Clutch release lever ratio			1.6	
Release bearing			Grease-packed self-aligning	
Clutch pedal	Full stroke mm (in)		130 — 135 (5.12 — 5.31)	
	Free play mm (in)		4 — 11 (0.16 — 0.43)	
Release lever	Stroke mm (in)		11.1 — 12.5 (0.437 — 0.492)	12.1 — 13.5 (0.48 — 0.53)
Flywheel	Type		Flexible	

Model			2.5 L Turbo STI
Transmission type			6MT
Clutch cover	Type		Pull type
	Diaphragm set load N (kgf, lbf)		9,120 (930, 2,050)
Clutch disc	Facing material		Woven (Non-asbestos)
	O.D. × I.D. × thickness mm (in)		Flywheel side: 240 × 160 × 3.2 (9.45 × 6.30 × 0.126) Clutch cover side: 240 × 160 × 3.5 (9.45 × 6.30 × 0.138)
	Spline outer diameter mm (in)		25.2 (0.992), (Number of teeth: 24)
	Depth of rivet head mm (in)	Standard	Flywheel side: 1.35 — 1.95 (0.053 — 0.077) Clutch cover side: 1.65 — 2.25 (0.065 — 0.089)
		Limit of sinking	0.3 (0.012)
	Deflection limit mm (in)		0.7 (0.028) at R = 115 (4.53)
Clutch release lever ratio			1.7
Release bearing			Grease-packed self-aligning
Clutch pedal	Full stroke mm (in)		130 — 135 (5.12 — 5.31)
	Free play mm (in)		3 — 13 (0.12 — 0.51)
Release lever	Stroke mm (in)		13.3 — 14.7 (0.524 — 0.579)
Flywheel	Type		Conventional

B: COMPONENT

1. CLUTCH ASSEMBLY

Non-turbo model

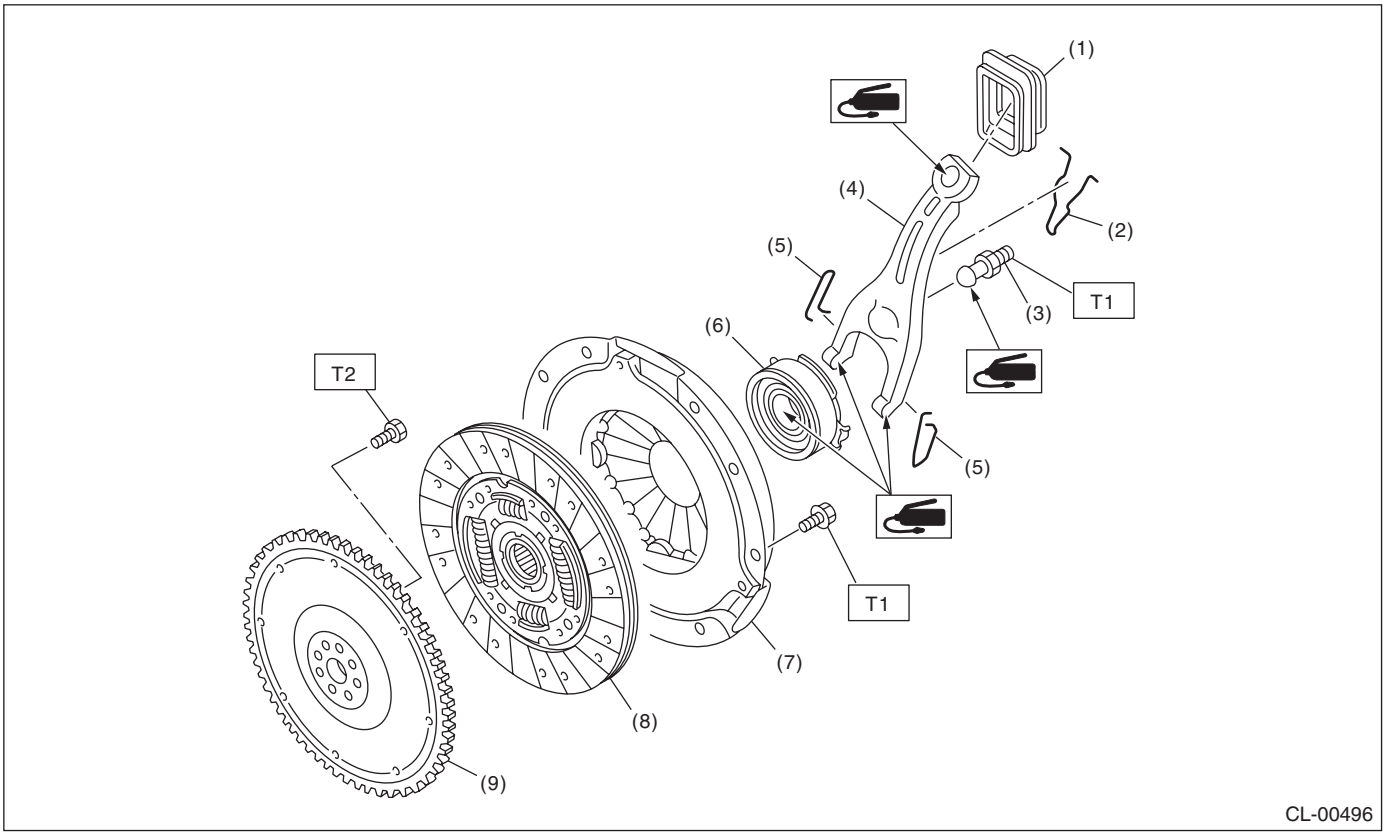

(1)	Dust cover	(6)	Release bearing
(2)	Lever spring	(7)	Clutch cover
(3)	Pivot	(8)	Clutch disc
(4)	Release lever	(9)	Flexible flywheel
(5)	Clip		

Tightening torque:N·m (kgf-m, ft-lb)
T1: 16 (1.6, 11.8)
T2: 72 (7.3, 52.8)

Turbo model

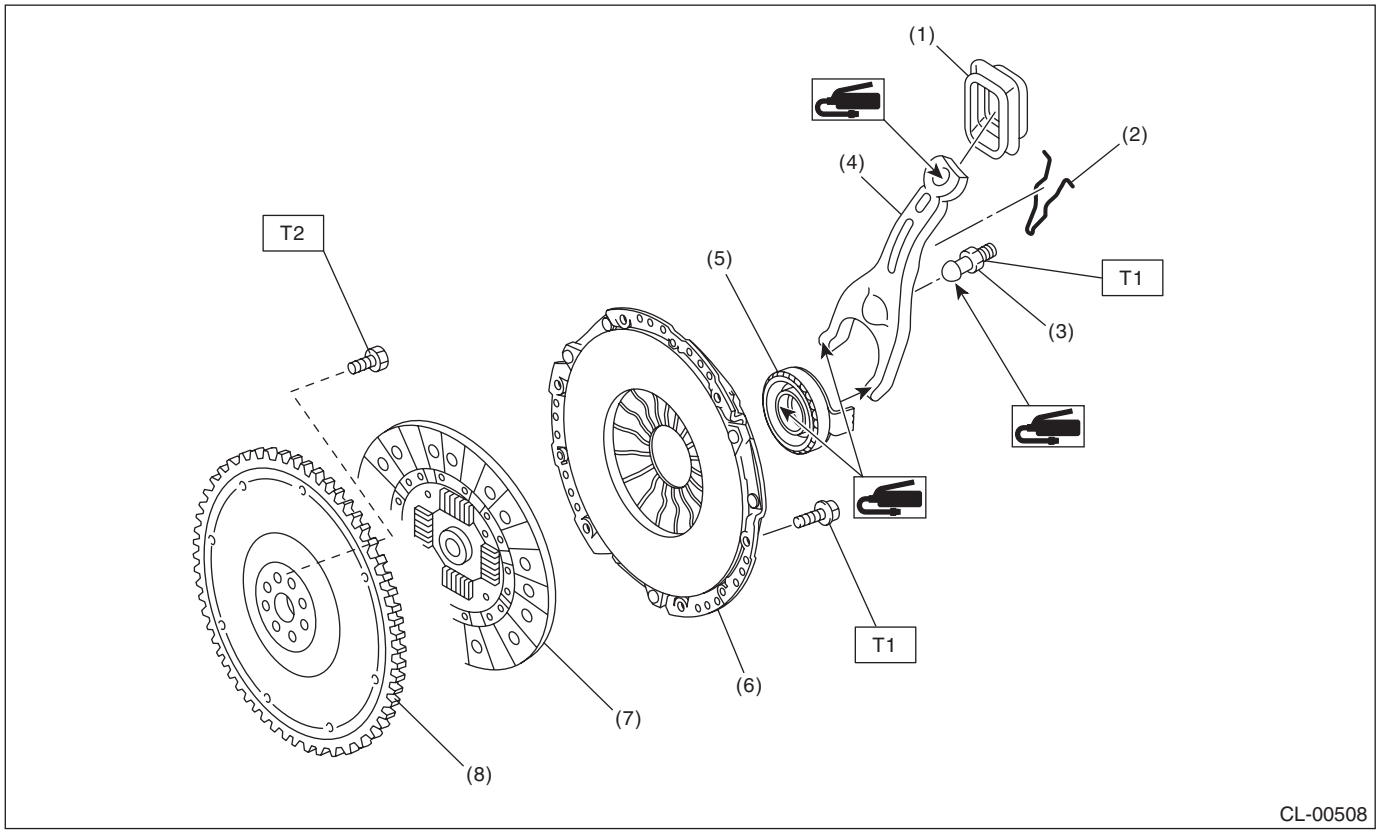

(1)	Dust cover	(5)	Release bearing
(2)	Lever spring	(6)	Clutch cover
(3)	Pivot	(7)	Clutch disc
(4)	Release lever	(8)	Flexible flywheel

Tightening torque:N·m (kgf-m, ft-lb)

T1: 16 (1.6, 11.8)

T2: 72 (7.3, 52.8)

STI model

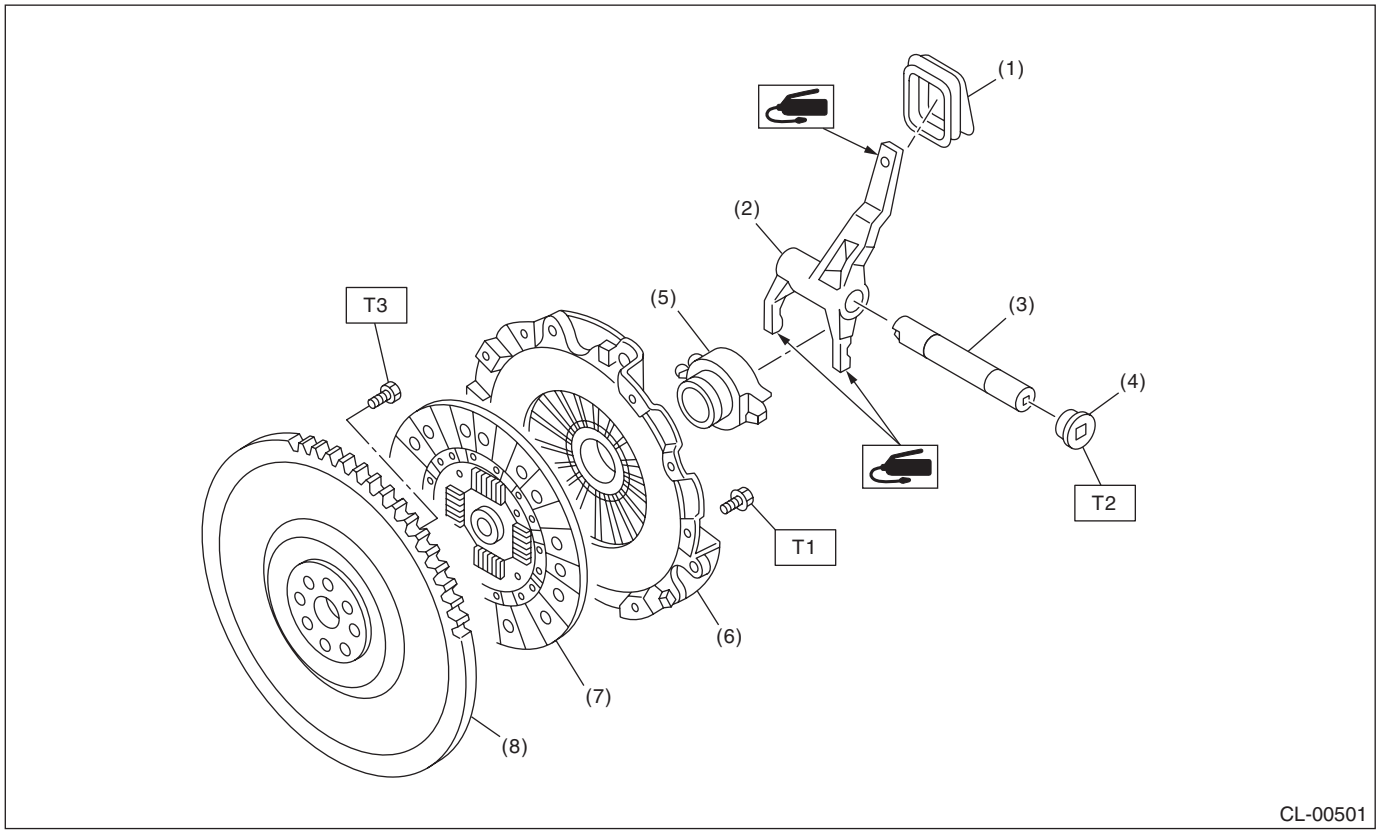

(1)	Dust cover	(5)	Release bearing	***Tightening torque:N·m (kgf-m, ft-lb)***
(2)	Release lever	(6)	Clutch cover	***T1: 16 (1.6, 11.8)***
(3)	Clutch release lever shaft	(7)	Clutch disc	***T2: 48 (4.9, 35.4)***
(4)	Plug	(8)	Conventional flywheel	***T3: 75 (7.6, 55.3)***

2. CLUTCH PIPE AND HOSE

Non-turbo model

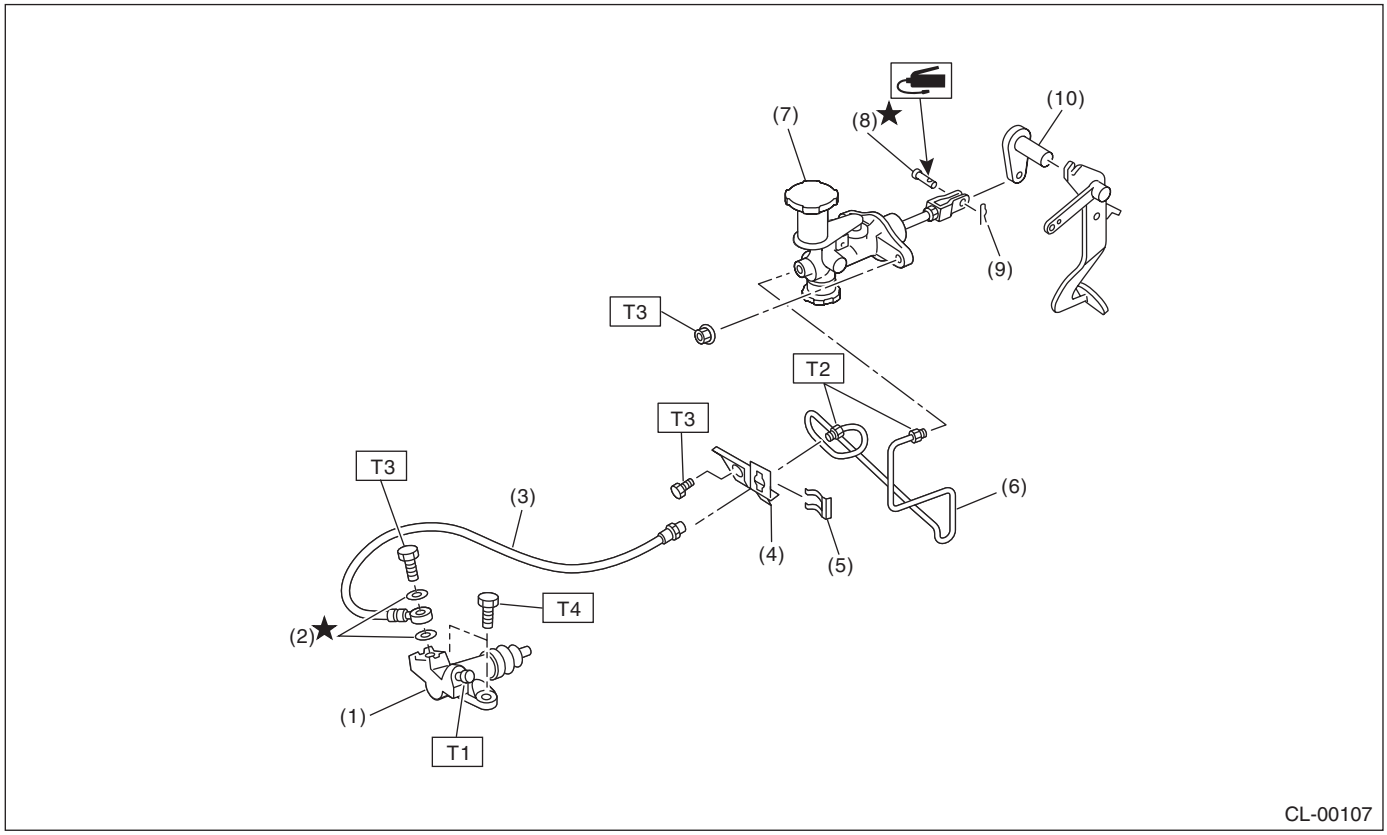

(1)	Operating cylinder	(6)	Clutch pipe	***Tightening torque:N·m (kgf-m, ft-lb)***
(2)	Washer	(7)	Master cylinder ASSY	***T1: 7.8 (0.8, 5.8)***
(3)	Clutch hose	(8)	Clevis pin	***T2: 15 (1.5, 10.8)***
(4)	Bracket	(9)	Snap pin	***T3: 18 (1.8, 13.3)***
(5)	Clip	(10)	Lever	***T4: 37 (3.8, 27.5)***

Turbo model

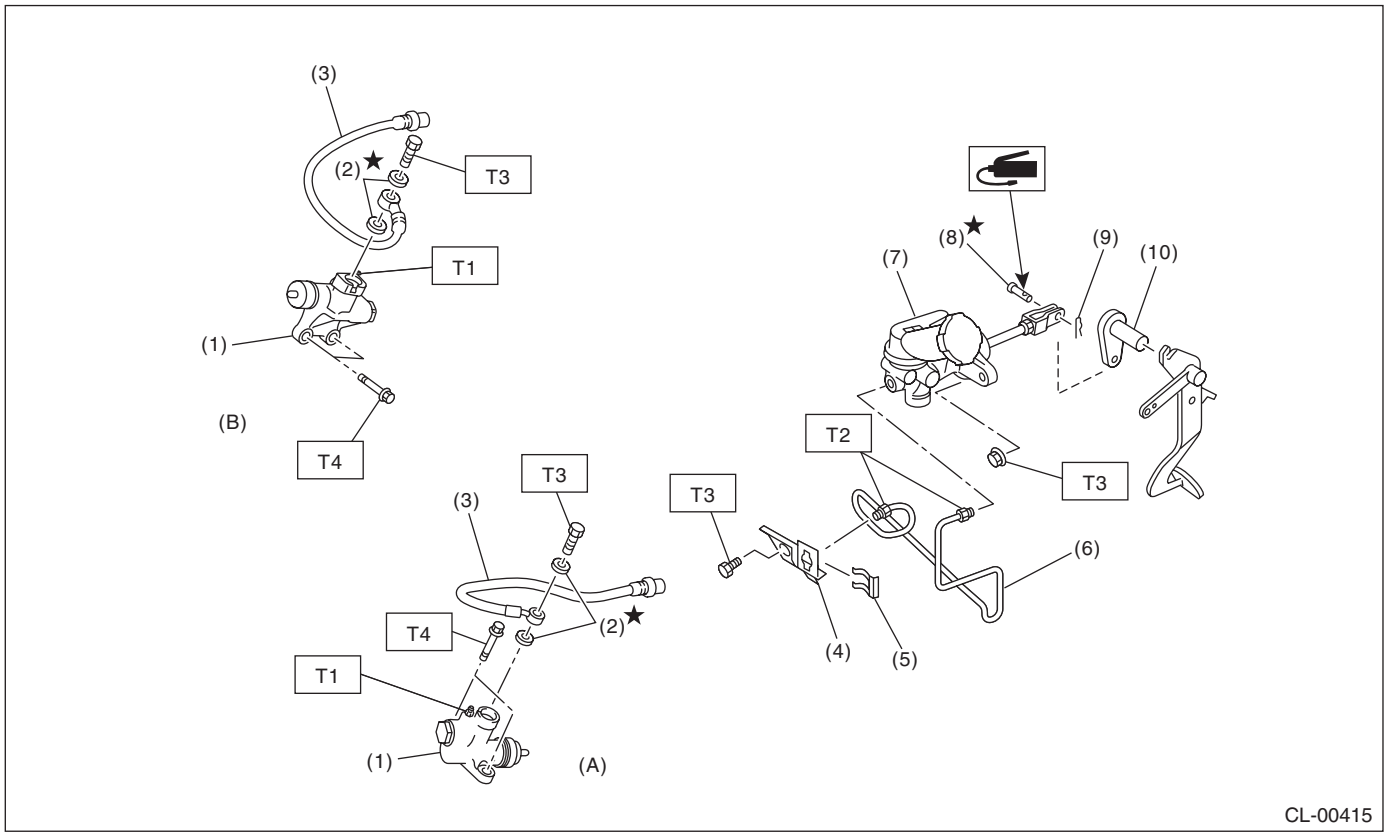

(A)	Turbo model	(B)	STI model
(1)	Operating cylinder	(9)	Snap pin
(2)	Washer	(10)	Lever
(3)	Clutch hose		
(4)	Bracket		
(5)	Clip		
(6)	Clutch pipe		
(7)	Master cylinder ASSY		
(8)	Clevis pin		

Tightening torque:N·m (kgf-m, ft-lb)

T1: 7.8 (0.8, 5.8)
T2: 15 (1.5, 10.8)
T3: 18 (1.8, 13.3)
T4: Except for STI model
37 (3.8, 27.5)
STI model
41 (4.2, 30.2)

3. MASTER CYLINDER

Non-turbo model

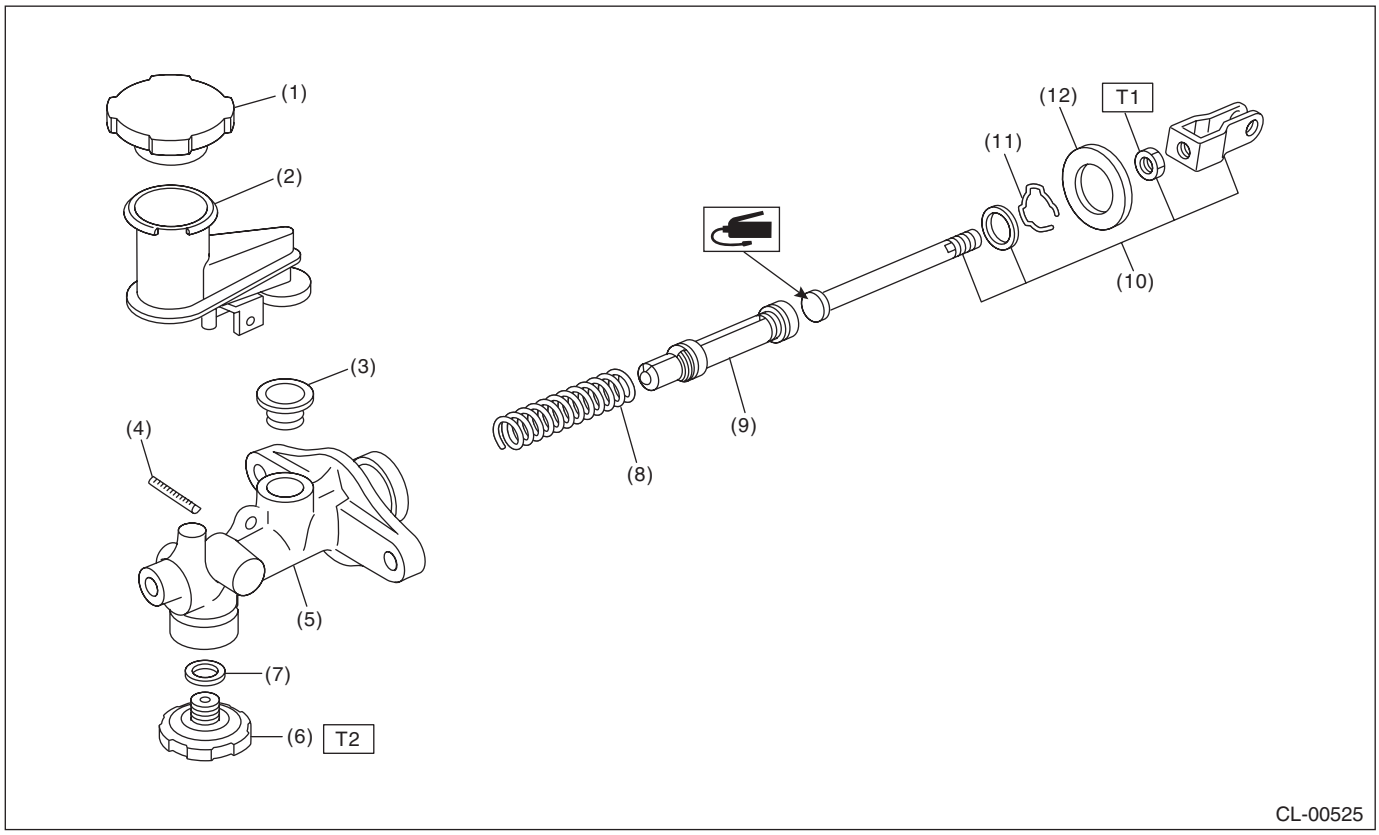

(1) Reservoir cap
(2) Reservoir tank
(3) Oil seal
(4) Straight pin
(5) Master cylinder
(6) Clutch damper
(7) Gasket
(8) Return spring
(9) Piston
(10) Push rod ASSY
(11) Piston stop ring
(12) Seat

Tightening torque:N·m (kgf-m, ft-lb)
T1: 10 (1.0, 7)
T2: 46.6 (4.75, 34.4)

Turbo model

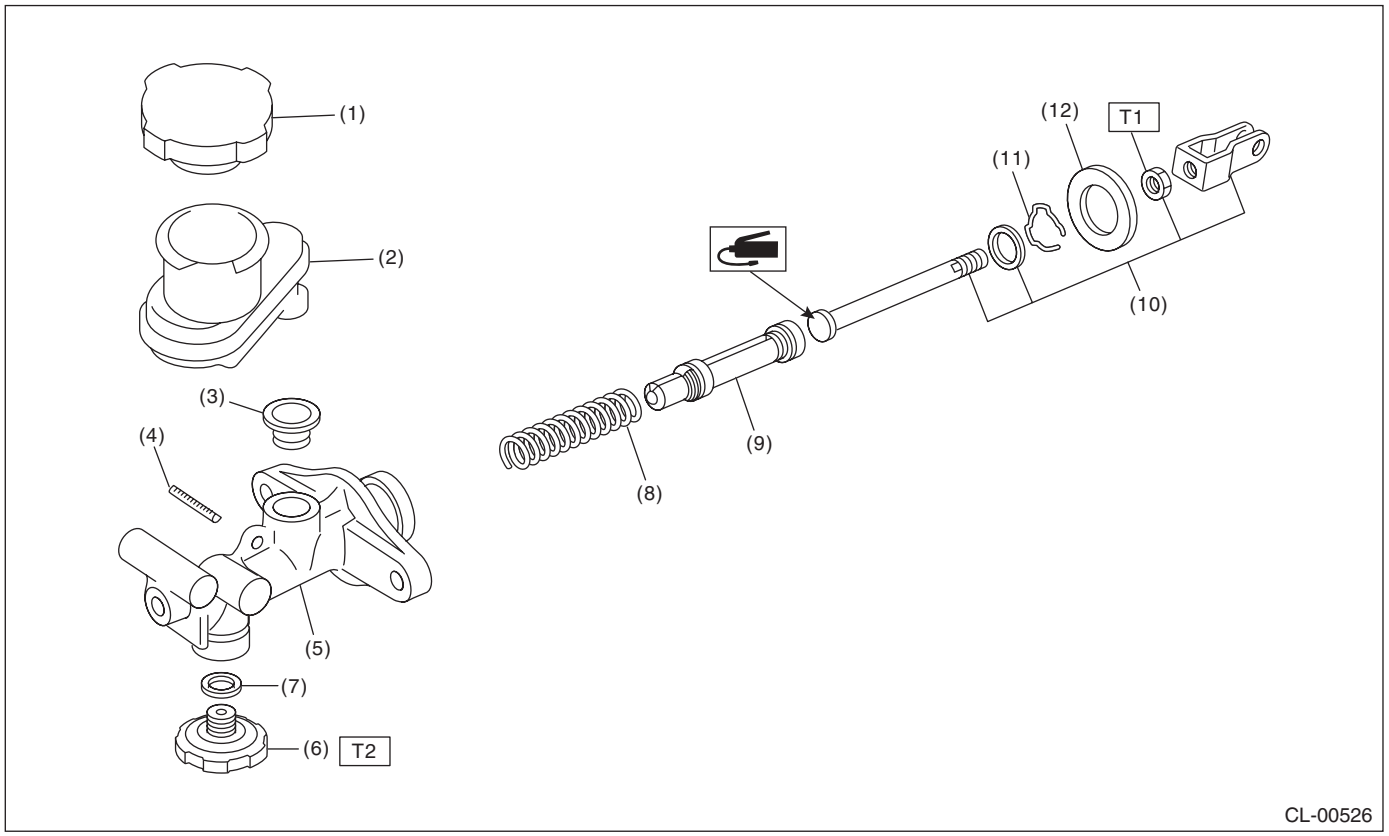

(1) Reservoir cap
(2) Reservoir tank
(3) Oil seal
(4) Straight pin
(5) Master cylinder
(6) Clutch damper
(7) Gasket
(8) Return spring
(9) Piston
(10) Push rod ASSY
(11) Piston stop ring
(12) Seat

Tightening torque:N·m (kgf-m, ft-lb)
T1: 10 (1.0, 7)
T2: 46.6 (4.75, 34.4)

4. OPERATING CYLINDER

Non-turbo model

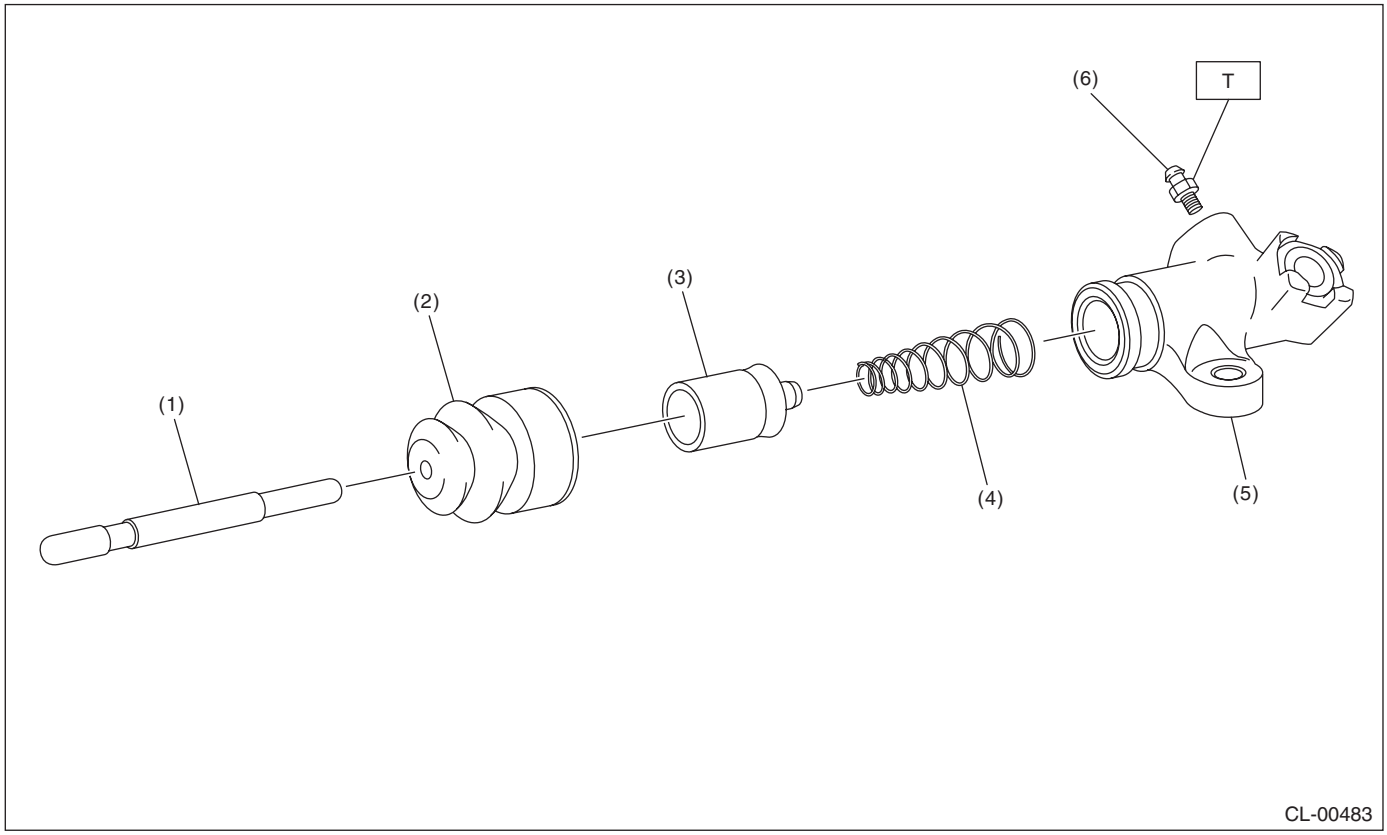

(1)	Push rod	(4)	Piston spring
(2)	Boot	(5)	Operating cylinder
(3)	Piston	(6)	Bleeder screw

Tightening torque:N·m (kgf-m, ft-lb)
T: 8 (0.8, 5.8)

Except for Non-turbo model and STI model

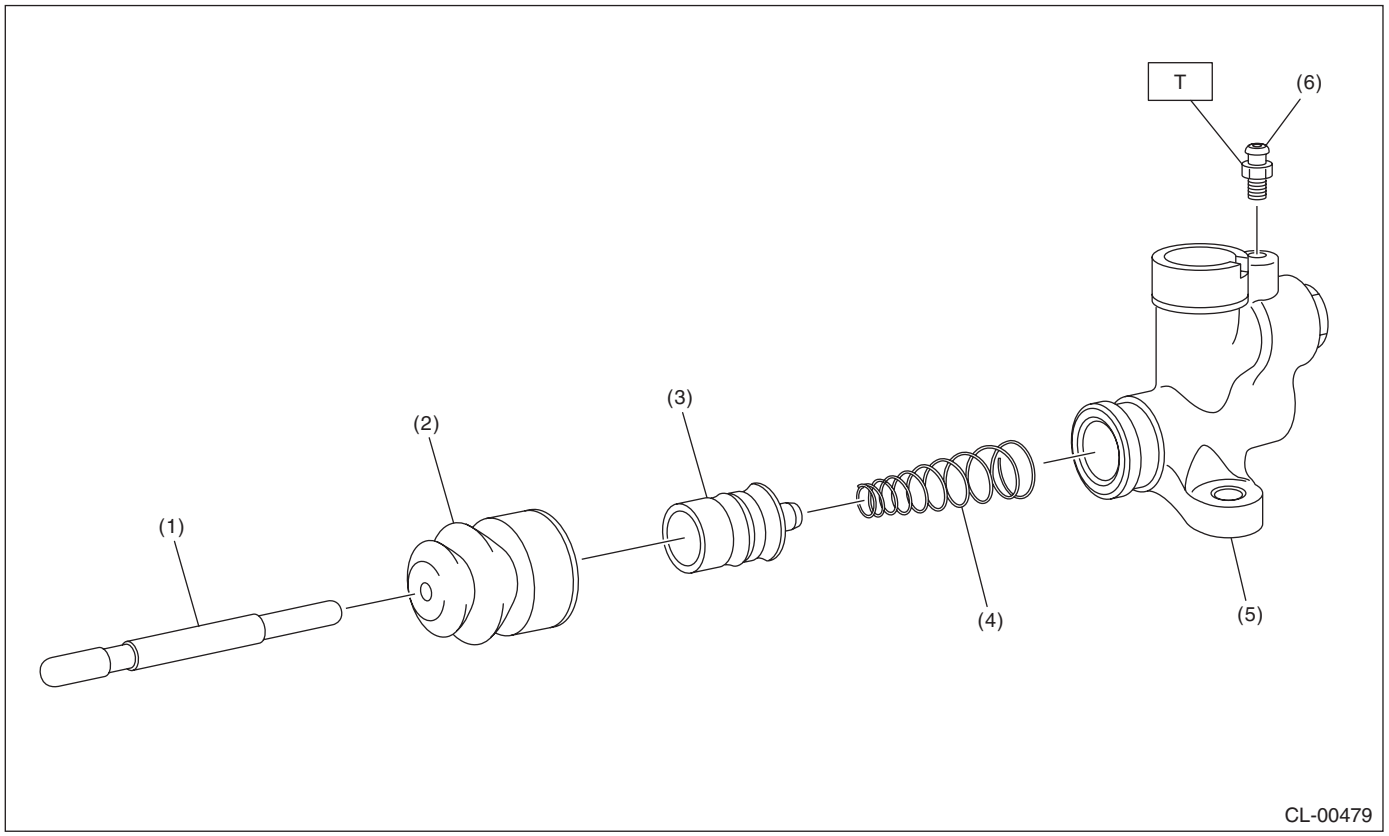

(1)	Push rod	(4)	Piston spring
(2)	Boot	(5)	Operating cylinder
(3)	Piston	(6)	Bleeder screw

Tightening torque:N·m (kgf-m, ft-lb)
T: 8 (0.8, 5.8)

5. CLUTCH PEDAL

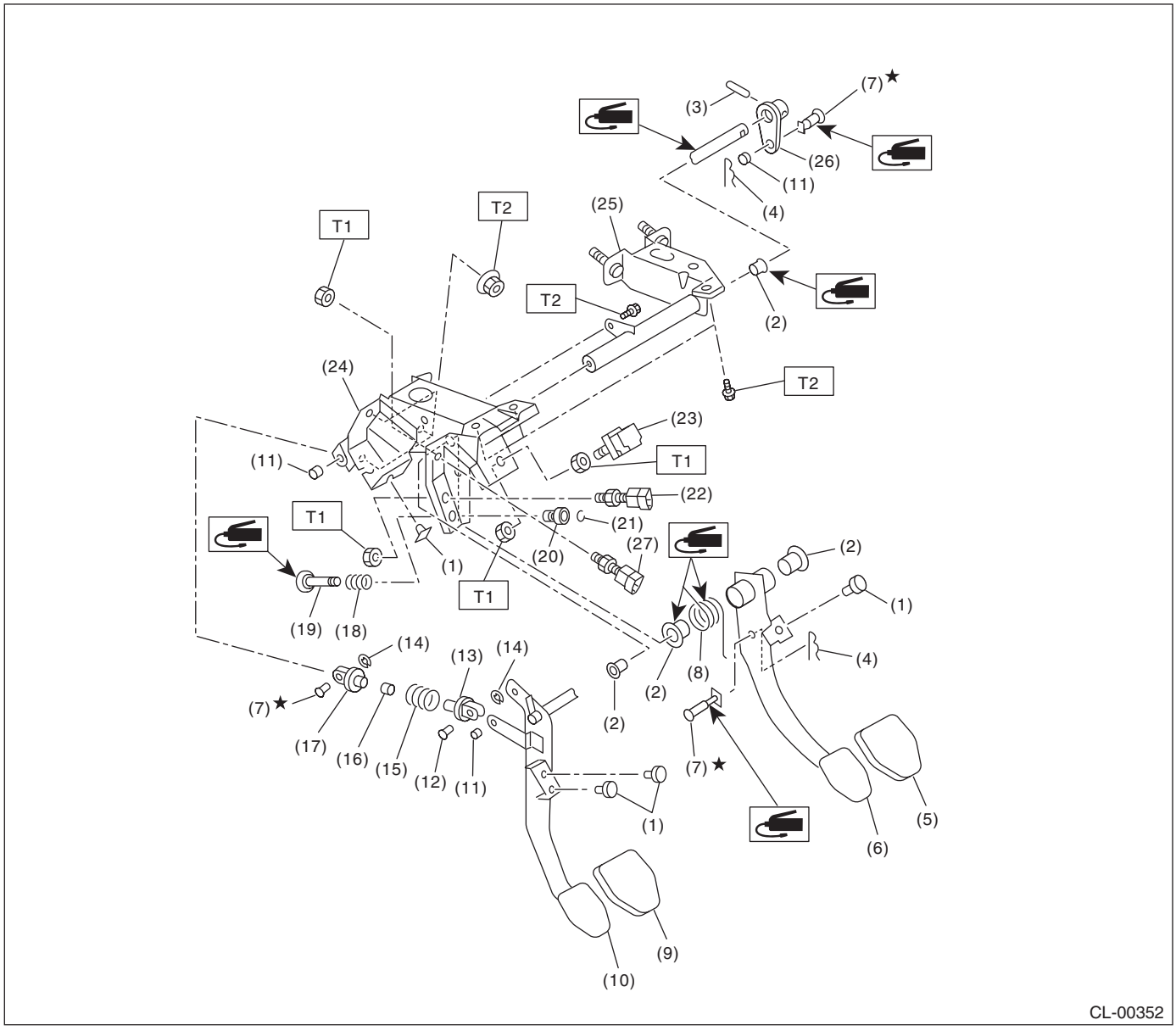

(1) Stopper
(2) Bushing
(3) Spring pin
(4) Snap pin
(5) Brake pedal pad
(6) Brake pedal
(7) Clevis pin
(8) Brake pedal spring
(9) Clutch pedal pad
(10) Clutch pedal
(11) Bushing C
(12) Clutch clevis pin
(13) Assist rod A
(14) Clip
(15) Assist spring
(16) Assist bushing
(17) Assist rod B
(18) Spring S
(19) Rod S
(20) Bushing S
(21) Clip
(22) Clutch switch (Model with cruise control)
(23) Stop light switch
(24) Pedal bracket
(25) Clutch master cylinder bracket
(26) Lever
(27) Clutch switch (starter interlock)

Tightening torque:N·m (kgf-m, ft-lb)
T1: 8 (0.8, 5.9)
T2: 18 (1.8, 13.3)

C: CAUTION

- Wear appropriate work clothing, including a cap, protective goggles and protective shoes when performing any work.
- Remove contamination including dirt and corrosion before removal, installation or disassembly.
- Keep the disassembled parts in order and protect them from dust and dirt.
- Before removal, installation or disassembly, be sure to clarify the failure. Avoid unnecessary removal, installation, disassembly and replacement.
- Vehicle components are extremely hot after driving. Be wary of receiving burns from heated parts.
- Use SUBARU genuine fluid, grease etc. or equivalent. Do not mix fluid, grease, etc. of different grades or manufacturers.
- Be sure to tighten fasteners including bolts and nuts to the specified torque.
- Place shop jacks or rigid racks at the specified points.
- Apply grease onto sliding or revolving surfaces before installation.
- Before installing O-rings or snap rings, apply sufficient amount of fluid to avoid damage and deformation.
- Before securing a part in a vise, place cushioning material such as wood blocks, aluminum plate or cloth between the part and the vise.
- Keep fluid away from the vehicle body. If any fluid contacts the vehicle body, immediately flush the area with water.

D: PREPARATION TOOL

1. SPECIAL TOOL

ILLUSTRATION	TOOL NUMBER	DESCRIPTION	REMARKS
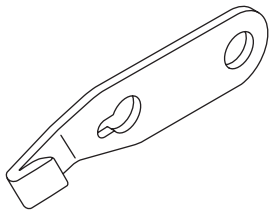 ST-498497100	498497100	CRANKSHAFT STOPPER	Used for stopping rotation of the flywheel when loosening/tightening bolts, etc.
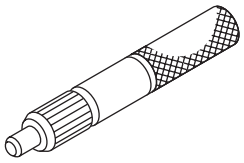 ST-499747100	499747100	CLUTCH DISC GUIDE	Used when installing the clutch disc to the flywheel.

2. GENERAL TOOL

TOOL NAME	REMARKS
Circuit tester	Used for measuring resistance, voltage and ampere.
Dial gauge	Used for measuring clutch disc run-out.
Depth gauge	Used for measuring clutch disc wear.